Eighth Edition

CHAPTER 9

VECTOR MECHANICS FOR ENGINEERS: STATICS

Ferdinand P. Beer
E. Russell Johnston, Jr.

Lecture Notes:
J. Walt Oler
Texas Tech University

Distributed Forces: Moments of Inertia

© 2007 The McGraw-Hill Companies, Inc. All rights reserved.

Contents

Introduction
Moments of Inertia of an Area
Moment of Inertia of an Area by Integration
Polar Moment of Inertia
Radius of Gyration of an Area
Sample Problem 9.1
Sample Problem 9.2
Parallel Axis Theorem
Moments of Inertia of Composite Areas
Sample Problem 9.4
Sample Problem 9.5
Product of Inertia
Principal Axes and Principal Moments of Inertia
Sample Problem 9.6
Sample Problem 9.7
Mohr's Circle for Moments and Products of Inertia
Sample Problem 9.8
Moment of Inertia of a Mass
Parallel Axis Theorem
Moment of Inertia of Thin Plates

© 2007 The McGraw-Hill Companies, Inc. All rights reserved.

Introduction

- Previously considered distributed forces which were proportional to the area or volume over which they act.
  - The resultant was obtained by summing or integrating over the areas or volumes.
  - The moment of the resultant about any axis was determined by computing the first moments of the areas or volumes about that axis.

- Will now consider forces which are proportional to the area or volume over which they act but also vary linearly with distance from a given axis.
  - It will be shown that the magnitude of the resultant depends on the first moment of the force distribution with respect to the axis.
  - The point of application of the resultant depends on the second moment of the distribution with respect to the axis.

- Current chapter will present methods for computing the moments and products of inertia for areas and masses.

Mc Graw Hill
© 2007 The McGraw-Hill Companies, Inc. All rights reserved.

Moment of Inertia of an Area

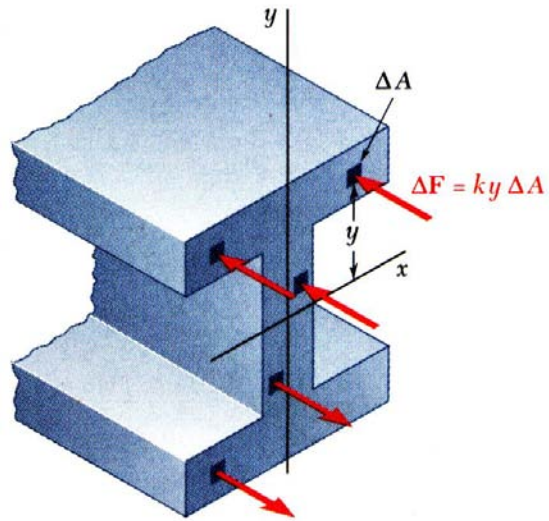

- Consider distributed forces $\Delta\vec{F}$ whose magnitudes are proportional to the elemental areas ΔA on which they act and also vary linearly with the distance of ΔA from a given axis.

- Example: Consider a beam subjected to pure bending. Internal forces vary linearly with distance from the neutral axis which passes through the section centroid.

$$\Delta\vec{F} = ky\Delta A$$

$$R = k\int y\,dA = 0 \qquad \int y\,dA = Q_x = \text{first moment}$$

$$M = k\int y^2 dA \qquad \int y^2 dA = \text{second moment}$$

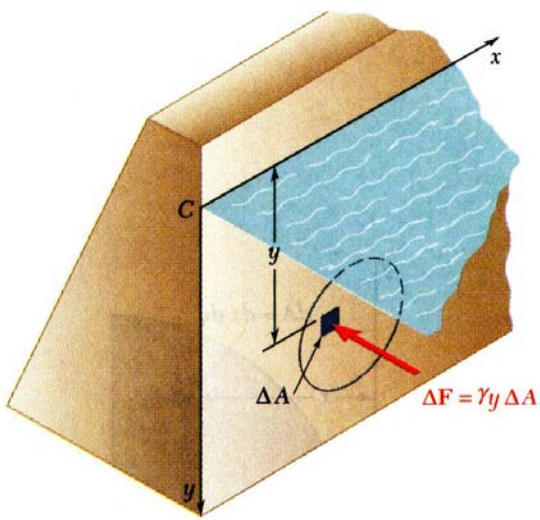

- Example: Consider the net hydrostatic force on a submerged circular gate.

$$\Delta F = p\Delta A = \gamma y\Delta A$$

$$R = \gamma\int y\,dA$$

$$M_x = \gamma\int y^2 dA$$

© 2007 The McGraw-Hill Companies, Inc. All rights reserved.

Moment of Inertia of an Area by Integration

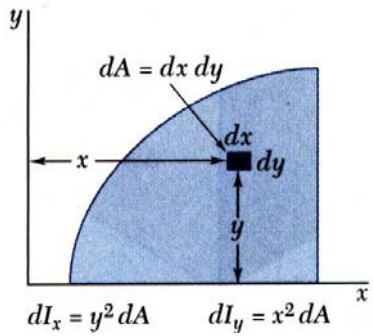

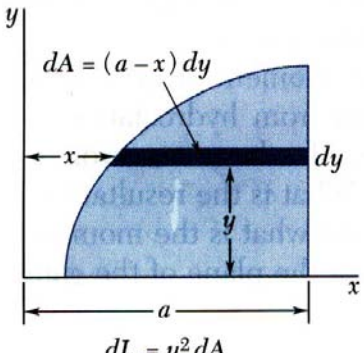

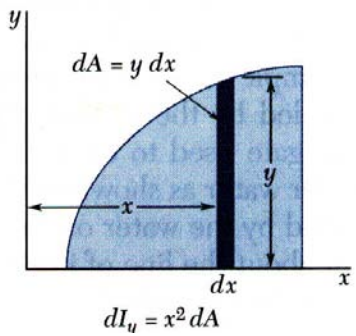

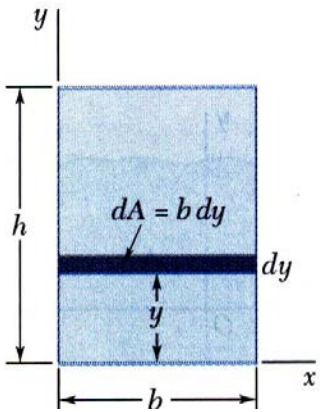

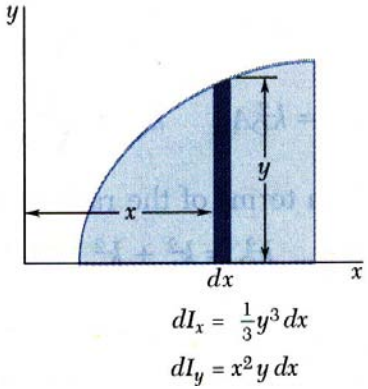

- *Second moments* or *moments of inertia* of an area with respect to the x and y axes,

$$I_x = \int y^2 dA \qquad I_y = \int x^2 dA$$

- Evaluation of the integrals is simplified by choosing dA to be a thin strip parallel to one of the coordinate axes.

- For a rectangular area,

$$I_x = \int y^2 dA = \int_0^h y^2 b dy = \tfrac{1}{3} b h^3$$

- The formula for rectangular areas may also be applied to strips parallel to the axes,

$$dI_x = \tfrac{1}{3} y^3 dx \qquad dI_y = x^2 dA = x^2 y\, dx$$

© 2007 The McGraw-Hill Companies, Inc. All rights reserved.

Polar Moment of Inertia

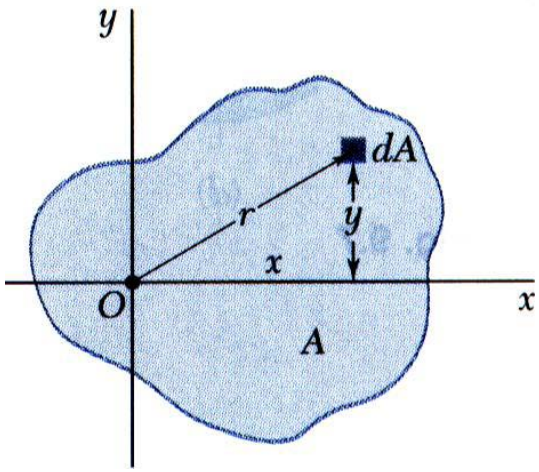

- The *polar moment of inertia* is an important parameter in problems involving torsion of cylindrical shafts and rotations of slabs.

$$J_0 = \int r^2 dA$$

- The polar moment of inertia is related to the rectangular moments of inertia,

$$J_0 = \int r^2 dA = \int \left(x^2 + y^2\right) dA = \int x^2 dA + \int y^2 dA$$
$$= I_y + I_x$$

© 2007 The McGraw-Hill Companies, Inc. All rights reserved.

Radius of Gyration of an Area

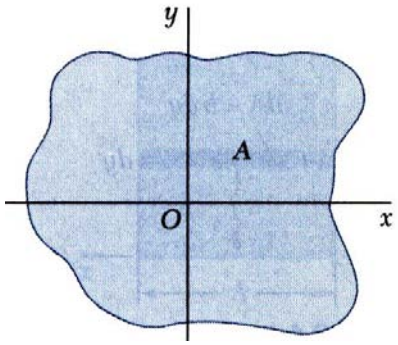

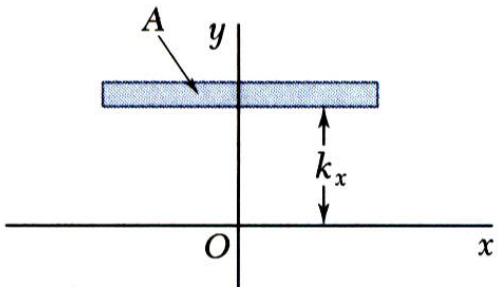

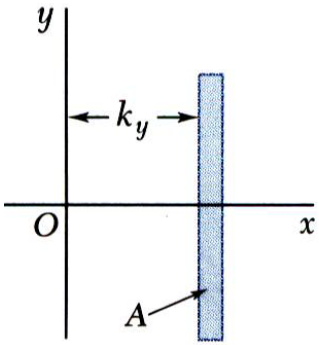

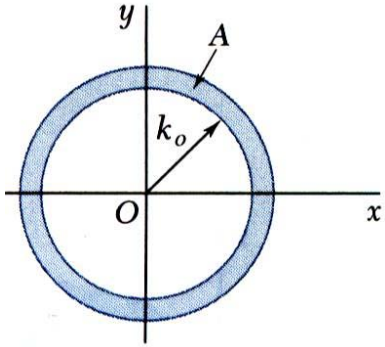

- Consider area A with moment of inertia I_x. Imagine that the area is concentrated in a thin strip parallel to the x axis with equivalent I_x.

$$I_x = k_x^2 A \qquad k_x = \sqrt{\frac{I_x}{A}}$$

$k_x =$ *radius of gyration* with respect to the x axis

- Similarly,

$$I_y = k_y^2 A \qquad k_y = \sqrt{\frac{I_y}{A}}$$

$$J_O = k_O^2 A \qquad k_O = \sqrt{\frac{J_O}{A}}$$

$$k_O^2 = k_x^2 + k_y^2$$

© 2007 The McGraw-Hill Companies, Inc. All rights reserved.

Sample Problem 9.1

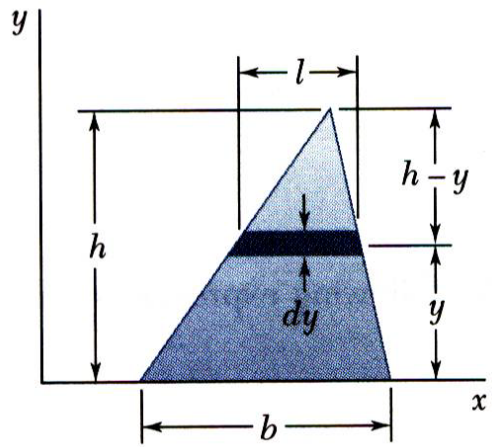

Determine the moment of inertia of a triangle with respect to its base.

SOLUTION:

- A differential strip parallel to the x axis is chosen for dA.

$$dI_x = y^2 dA \qquad dA = l\,dy$$

- For similar triangles,

$$\frac{l}{b} = \frac{h-y}{h} \qquad l = b\frac{h-y}{h} \qquad dA = b\frac{h-y}{h}dy$$

- Integrating dI_x from $y = 0$ to $y = h$,

$$I_x = \int y^2 dA = \int_0^h y^2 b\frac{h-y}{h}dy = \frac{b}{h}\int_0^h \left(hy^2 - y^3\right)dy$$

$$= \frac{b}{h}\left[h\frac{y^3}{3} - \frac{y^4}{4}\right]_0^h \qquad \boxed{I_x = \frac{bh^3}{12}}$$

© 2007 The McGraw-Hill Companies, Inc. All rights reserved.

Sample Problem 9.2

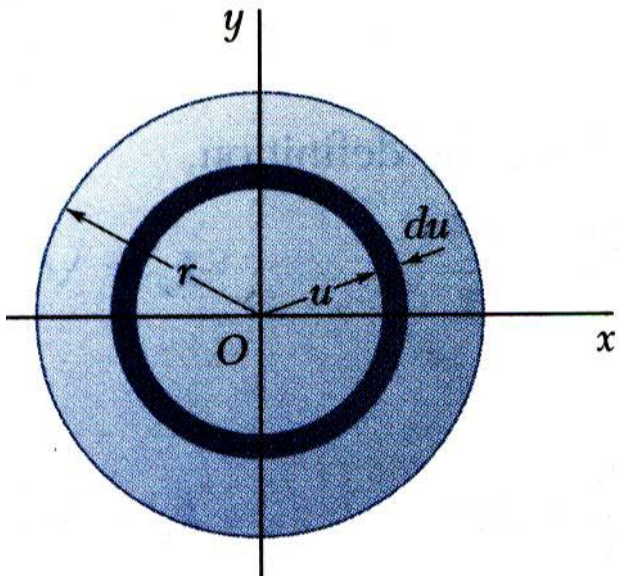

a) Determine the centroidal polar moment of inertia of a circular area by direct integration.

b) Using the result of part *a*, determine the moment of inertia of a circular area with respect to a diameter.

SOLUTION:

- An annular differential area element is chosen,

$$dJ_O = u^2 dA \qquad dA = 2\pi u\, du$$

$$J_O = \int dJ_O = \int_0^r u^2 (2\pi u\, du) = 2\pi \int_0^r u^3 du$$

$$\boxed{J_O = \frac{\pi}{2} r^4}$$

- From symmetry, $I_x = I_y$,

$$J_O = I_x + I_y = 2I_x \qquad \frac{\pi}{2} r^4 = 2I_x$$

$$\boxed{I_{diameter} = I_x = \frac{\pi}{4} r^4}$$

© 2007 The McGraw-Hill Companies, Inc. All rights reserved.

Parallel Axis Theorem

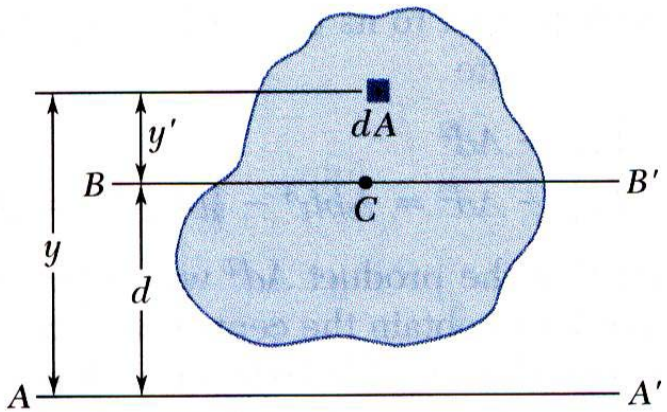

- Consider moment of inertia I of an area A with respect to the axis AA'

$$I = \int y^2 dA$$

- The axis BB' passes through the area centroid and is called a *centroidal axis*.

$$I = \int y^2 dA = \int (y' + d)^2 dA$$

$$= \int y'^2 dA + 2d \int y' dA + d^2 \int dA$$

$$I = \bar{I} + Ad^2 \qquad \textit{parallel axis theorem}$$

© 2007 The McGraw-Hill Companies, Inc. All rights reserved.

Parallel Axis Theorem

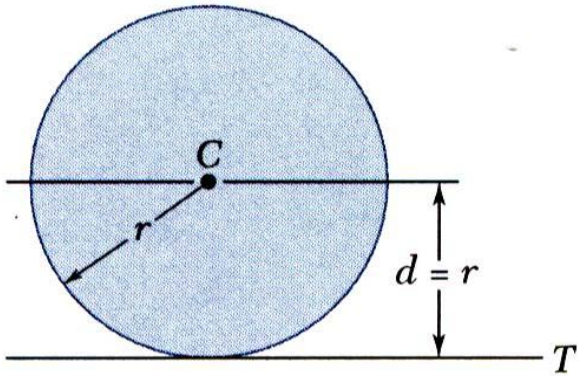

- Moment of inertia I_T of a circular area with respect to a tangent to the circle,

$$I_T = \bar{I} + Ad^2 = \tfrac{1}{4}\pi r^4 + \left(\pi r^2\right) r^2$$

$$= \tfrac{5}{4}\pi r^4$$

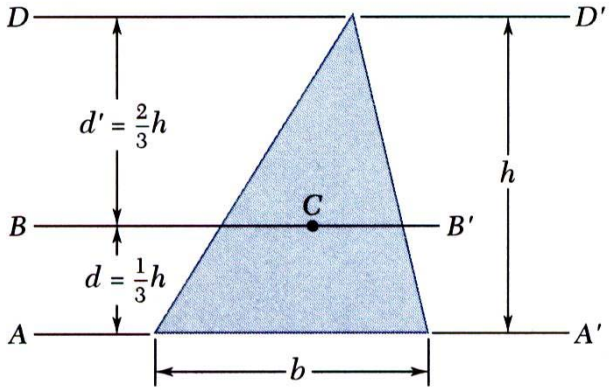

- Moment of inertia of a triangle with respect to a centroidal axis,

$$I_{AA'} = \bar{I}_{BB'} + Ad^2$$

$$I_{BB'} = I_{AA'} - Ad^2 = \tfrac{1}{12}bh^3 - \tfrac{1}{2}bh\left(\tfrac{1}{3}h\right)^2$$

$$= \tfrac{1}{36}bh^3$$

© 2007 The McGraw-Hill Companies, Inc. All rights reserved.

Moments of Inertia of Composite Areas

- The moment of inertia of a composite area A about a given axis is obtained by adding the moments of inertia of the component areas $A_1, A_2, A_3, \ldots$, with respect to the same axis.

Rectangle	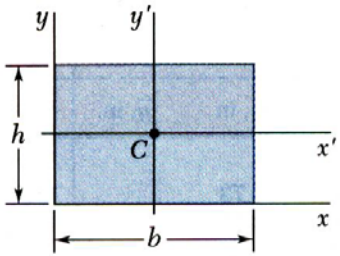	$\bar{I}_{x'} = \frac{1}{12}bh^3$ $\bar{I}_{y'} = \frac{1}{12}b^3h$ $I_x = \frac{1}{3}bh^3$ $I_y = \frac{1}{3}b^3h$ $J_C = \frac{1}{12}bh(b^2 + h^2)$	Semicircle	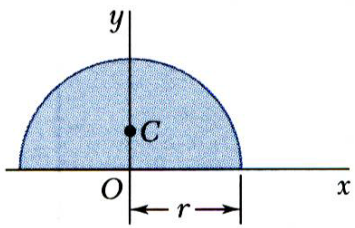	$I_x = I_y = \frac{1}{8}\pi r^4$ $J_O = \frac{1}{4}\pi r^4$
Triangle	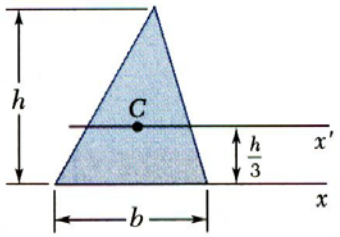	$\bar{I}_{x'} = \frac{1}{36}bh^3$ $I_x = \frac{1}{12}bh^3$	Quarter circle	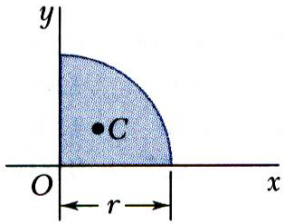	$I_x = I_y = \frac{1}{16}\pi r^4$ $J_O = \frac{1}{8}\pi r^4$
Circle	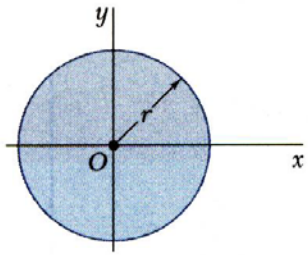	$\bar{I}_x = \bar{I}_y = \frac{1}{4}\pi r^4$ $J_O = \frac{1}{2}\pi r^4$	Ellipse	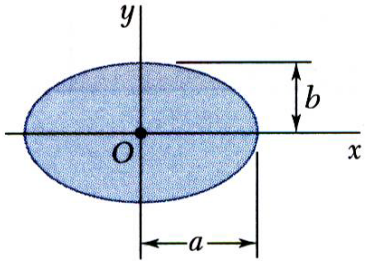	$\bar{I}_x = \frac{1}{4}\pi ab^3$ $\bar{I}_y = \frac{1}{4}\pi a^3b$ $J_O = \frac{1}{4}\pi ab(a^2 + b^2)$

© 2007 The McGraw-Hill Companies, Inc. All rights reserved.

Moments of Inertia of Composite Areas

		Designation	Area mm^2	Depth mm	Width mm	Axis X-X $\bar{I}_x$ 10^6 mm^4	Axis X-X $\bar{k}_x$ mm	Axis X-X $\bar{y}$ mm	Axis Y-Y $\bar{I}_y$ 10^6 mm^4	Axis Y-Y $\bar{k}_y$ mm	Axis Y-Y $\bar{x}$ mm
W Shapes (Wide-Flange Shapes)	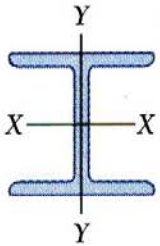	W460 × 113†	14400	463	280	554	196.3		63.3	66.3	
		W410 × 85	10800	417	181	316	170.7		17.94	40.6	
		W360 × 57	7230	358	172	160.2	149.4		11.11	39.4	
		W200 × 46.1	5890	203	203	45.8	88.1		15.44	51.3	
S Shapes (American Standard Shapes)	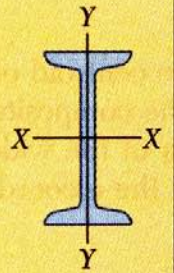	S460 × 81.4†	10390	457	152	335	179.6		8.66	29.0	
		S310 × 47.3	6032	305	127	90.7	122.7		3.90	25.4	
		S250 × 37.8	4806	254	118	51.6	103.4		2.83	24.2	
		S150 × 18.6	2362	152	84	9.2	62.2		0.758	17.91	
C Shapes (American Standard Channels)	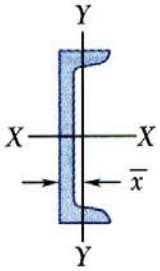	C310 × 30.8†	3929	305	74	53.7	117.1		1.615	20.29	17.73
		C250 × 22.8	2897	254	65	28.1	98.3		0.949	18.11	16.10
		C200 × 17.1	2181	203	57	13.57	79.0		0.549	15.88	14.50
		C150 × 12.2	1548	152	48	5.45	59.4		0.288	13.64	13.00

© 2007 The McGraw-Hill Companies, Inc. All rights reserved.

Sample Problem 9.4

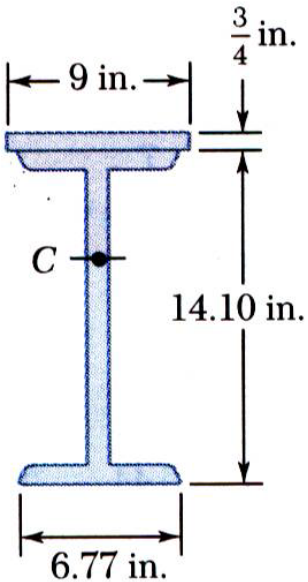

The strength of a W14x38 rolled steel beam is increased by attaching a plate to its upper flange.

Determine the moment of inertia and radius of gyration with respect to an axis which is parallel to the plate and passes through the centroid of the section.

SOLUTION:

- Determine location of the centroid of composite section with respect to a coordinate system with origin at the centroid of the beam section.
- Apply the parallel axis theorem to determine moments of inertia of beam section and plate with respect to composite section centroidal axis.
- Calculate the radius of gyration from the moment of inertia of the composite section.

© 2007 The McGraw-Hill Companies, Inc. All rights reserved.

Sample Problem 9.4

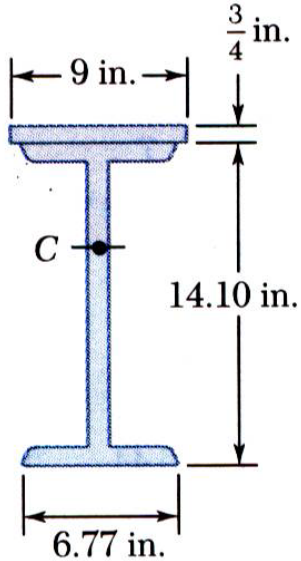

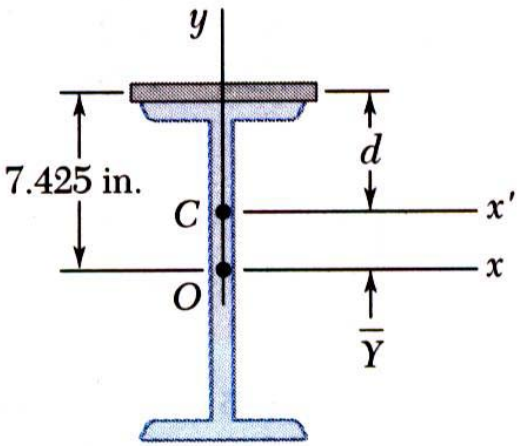

SOLUTION:

- Determine location of the centroid of composite section with respect to a coordinate system with origin at the centroid of the beam section.

Section	A, in^2	$\bar{y}$, in.	$\bar{y}A$, in^3
Plate	6.75	7.425	50.12
Beam Section	11.20	0	0
	$\sum A = 17.95$		$\sum \bar{y}A = 50.12$

$$\bar{Y}\sum A = \sum \bar{y}A \qquad \bar{Y} = \frac{\sum \bar{y}A}{\sum A} = \frac{50.12\text{ in}^3}{17.95\text{ in}^2} = 2.792\text{ in.}$$

© 2007 The McGraw-Hill Companies, Inc. All rights reserved.

Sample Problem 9.4

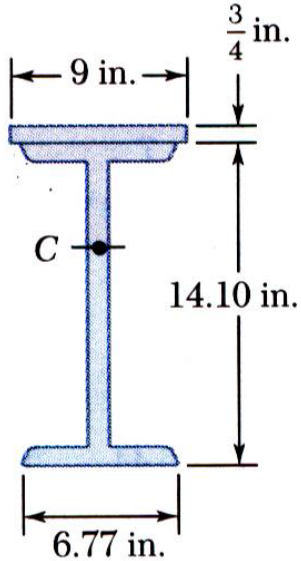

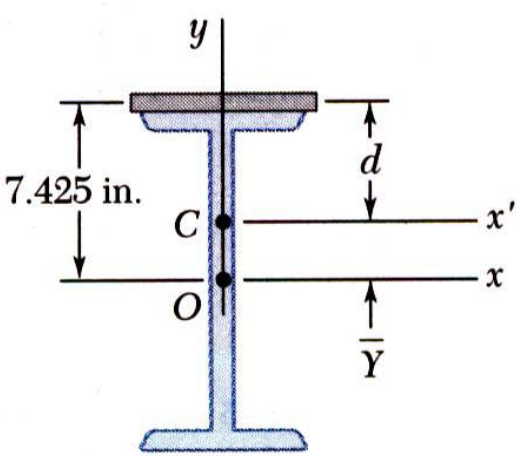

- Apply the parallel axis theorem to determine moments of inertia of beam section and plate with respect to composite section centroidal axis.

$$I_{x',\text{beam section}} = \bar{I}_x + A\bar{Y}^2 = 385 + (11.20)(2.792)^2$$

$$= 472.3\ \text{in}^4$$

$$I_{x',\text{plate}} = \bar{I}_x + Ad^2 = \tfrac{1}{12}(9)\left(\tfrac{3}{4}\right)^3 + (6.75)(7.425 - 2.792)^2$$

$$= 145.2\ \text{in}^4$$

$$I_{x'} = I_{x',\text{beam section}} + I_{x',\text{plate}} = 472.3 + 145.2$$

$$\boxed{I_{x'} = 618\ \text{in}^4}$$

- Calculate the radius of gyration from the moment of inertia of the composite section.

$$k_{x'} = \sqrt{\frac{I_{x'}}{A}} = \frac{617.5\ \text{in}^4}{17.95\ \text{in}^2}$$

$$\boxed{k_{x'} = 5.87\ \text{in.}}$$

© 2007 The McGraw-Hill Companies, Inc. All rights reserved.

Sample Problem 9.5

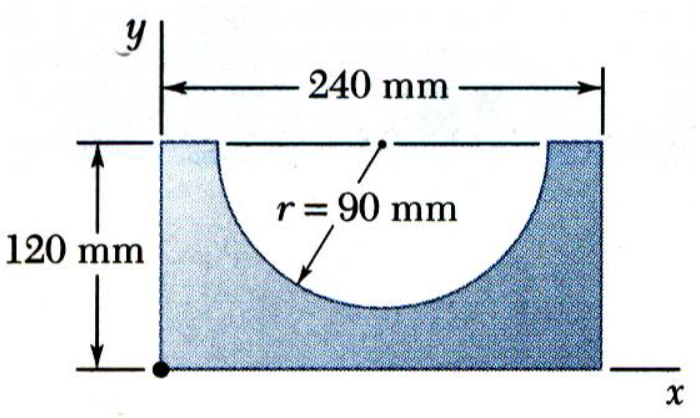

Determine the moment of inertia of the shaded area with respect to the *x* axis.

SOLUTION:

- Compute the moments of inertia of the bounding rectangle and half-circle with respect to the *x* axis.
- The moment of inertia of the shaded area is obtained by subtracting the moment of inertia of the half-circle from the moment of inertia of the rectangle.

© 2007 The McGraw-Hill Companies, Inc. All rights reserved.

Sample Problem 9.5

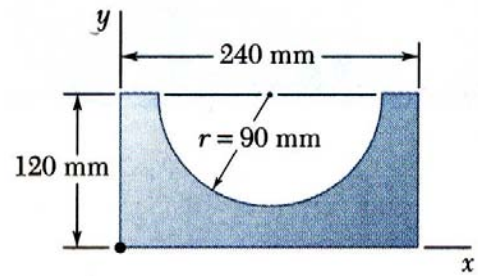

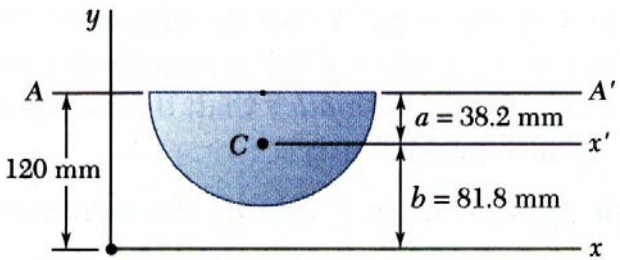

$$a = \frac{4r}{3\pi} = \frac{(4)(90)}{3\pi} = 38.2 \text{ mm}$$

$$\text{b} = 120 - \text{a} = 81.8 \text{ mm}$$

$$A = \tfrac{1}{2}\pi r^2 = \tfrac{1}{2}\pi(90)^2$$

$$= 12.72 \times 10^3 \text{ mm}^2$$

SOLUTION:

- Compute the moments of inertia of the bounding rectangle and half-circle with respect to the *x* axis.

Rectangle:

$$I_x = \tfrac{1}{3}bh^3 = \tfrac{1}{3}(240)(120) = 138.2 \times 10^6 \text{ mm}^4$$

Half-circle:

moment of inertia with respect to *AA'*,

$$I_{AA'} = \tfrac{1}{8}\pi r^4 = \tfrac{1}{8}\pi(90)^4 = 25.76 \times 10^6 \text{ mm}^4$$

moment of inertia with respect to *x'*,

$$\bar{I}_{x'} = I_{AA'} - Aa^2 = \left(25.76 \times 10^6\right)\left(12.72 \times 10^3\right)$$

$$= 7.20 \times 10^6 \text{ mm}^4$$

moment of inertia with respect to *x*,

$$I_x = \bar{I}_{x'} + Ab^2 = 7.20 \times 10^6 + \left(12.72 \times 10^3\right)(81.8)^2$$

$$= 92.3 \times 10^6 \text{ mm}^4$$

© 2007 The McGraw-Hill Companies, Inc. All rights reserved.

Sample Problem 9.5

- The moment of inertia of the shaded area is obtained by subtracting the moment of inertia of the half-circle from the moment of inertia of the rectangle.

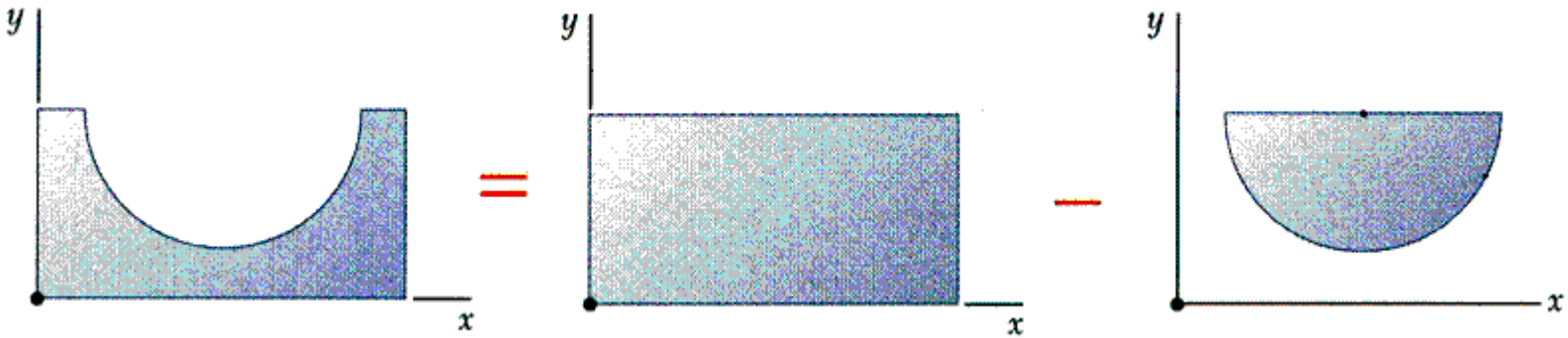

$$I_x = 138.2\times10^6\,\text{mm}^4 - 92.3\times10^6\,\text{mm}^4$$

$$\boxed{I_x = 45.9\times10^6\,\text{mm}^4}$$

© 2007 The McGraw-Hill Companies, Inc. All rights reserved.

Product of Inertia

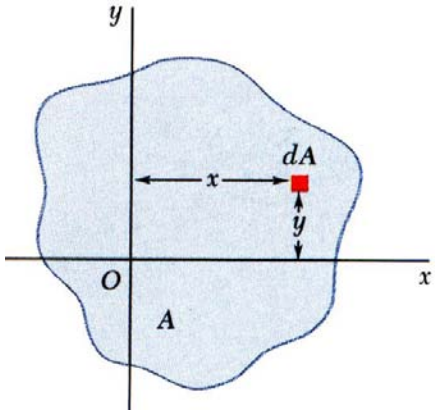

- *Product of Inertia:*

$$I_{xy} = \int xy\, dA$$

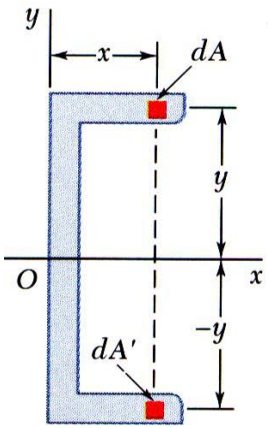

- When the x axis, the y axis, or both are an axis of symmetry, the product of inertia is zero.

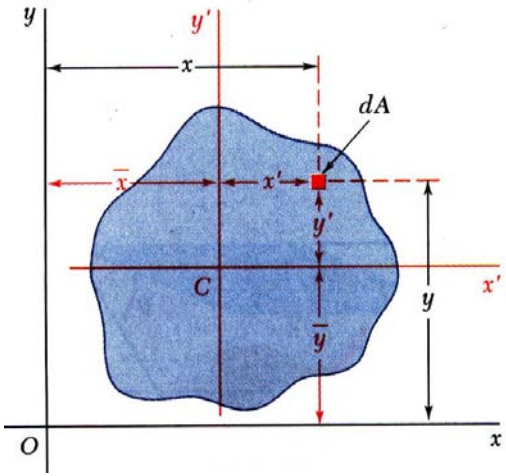

- Parallel axis theorem for products of inertia:

$$I_{xy} = \bar{I}_{xy} + \bar{x}\bar{y}A$$

© 2007 The McGraw-Hill Companies, Inc. All rights reserved.

Principal Axes and Principal Moments of Inertia

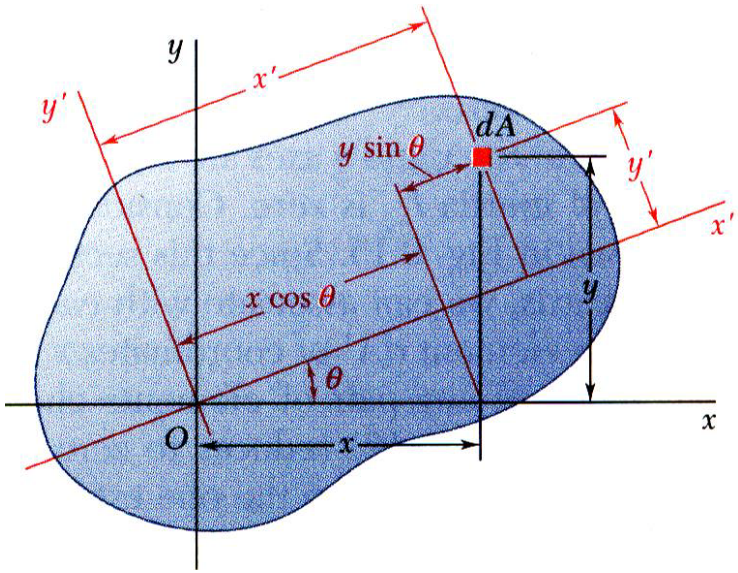

Given $I_x = \int y^2 dA \quad I_y = \int x^2 dA$

$$I_{xy} = \int xy\, dA$$

we wish to determine moments and product of inertia with respect to new axes *x'* and *y'*.

Note: $x' = x\cos\theta + y\sin\theta$

$$y' = y\cos\theta - x\sin\theta$$

- The change of axes yields

$$I_{x'} = \frac{I_x + I_y}{2} + \frac{I_x - I_y}{2}\cos 2\theta - I_{xy}\sin 2\theta$$

$$I_{y'} = \frac{I_x + I_y}{2} - \frac{I_x - I_y}{2}\cos 2\theta + I_{xy}\sin 2\theta$$

$$I_{x'y'} = \frac{I_x - I_y}{2}\sin 2\theta + I_{xy}\cos 2\theta$$

- The equations for $I_{x'}$ and $I_{x'y'}$ are the parametric equations for a circle,

$$(I_{x'} - I_{ave})^2 + I_{x'y'}^2 = R^2$$

$$I_{ave} = \frac{I_x + I_y}{2} \qquad R = \sqrt{\left(\frac{I_x - I_y}{2}\right) + I_{xy}^2}$$

- The equations for $I_{y'}$ and $I_{x'y'}$ lead to the same circle.

© 2007 The McGraw-Hill Companies, Inc. All rights reserved.

Principal Axes and Principal Moments of Inertia

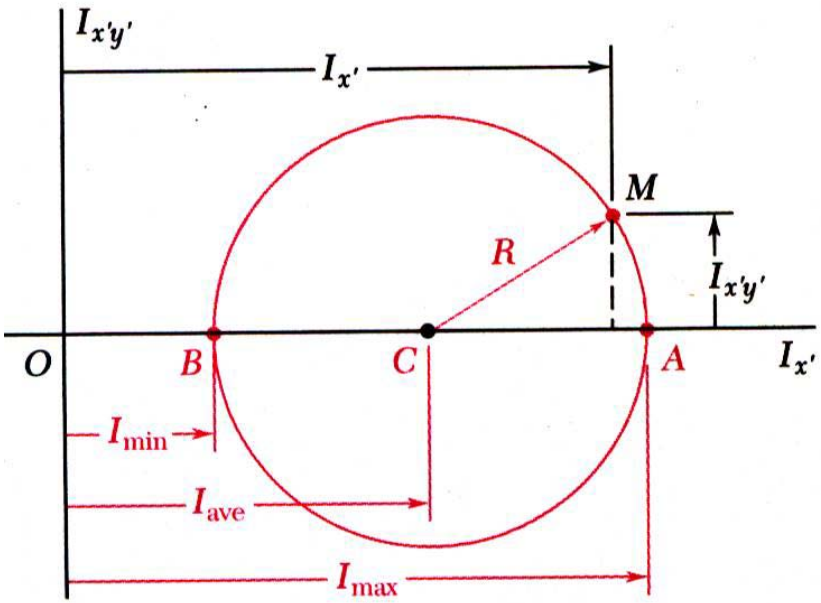

$$(I_{x'} - I_{ave})^2 + I_{x'y'}^2 = R^2$$

$$I_{ave} = \frac{I_x + I_y}{2} \qquad R = \sqrt{\left(\frac{I_x - I_y}{2}\right) + I_{xy}^2}$$

- At the points A and B, $I_{x'y'} = 0$ and $I_{x'}$ is a maximum and minimum, respectively.

$$I_{\max,\min} = I_{ave} \pm R$$

$$\tan 2\theta_m = -\frac{2I_{xy}}{I_x - I_y}$$

- The equation for Θ_m defines two angles, 90° apart which correspond to the *principal axes* of the area about O.

- I_{max} and I_{min} are the *principal moments of inertia* of the area about O.

© 2007 The McGraw-Hill Companies, Inc. All rights reserved.

Vector Mechanics for Engineers: Dynamics

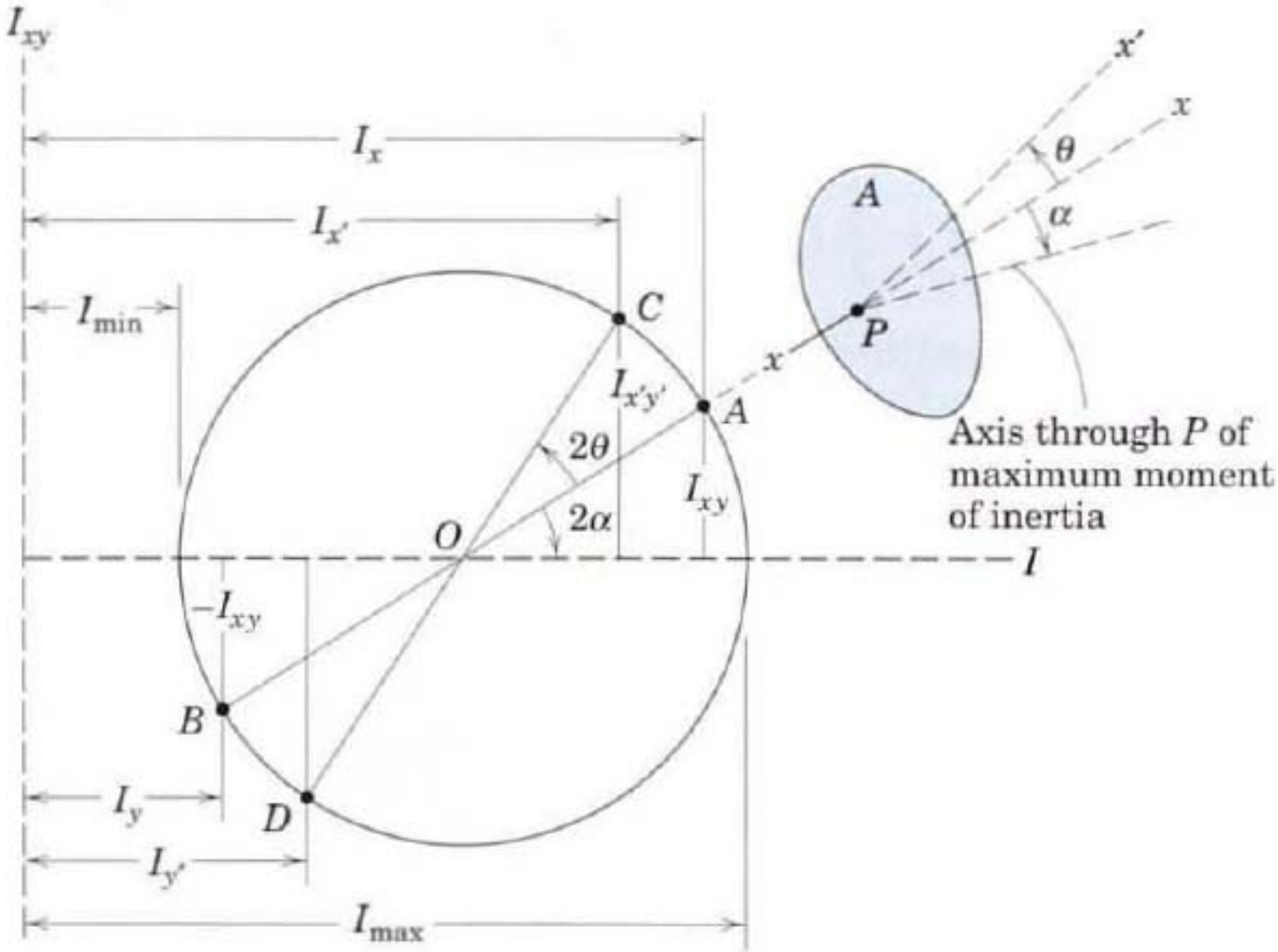

© 2007 The McGraw-Hill Companies, Inc. All rights reserved.

Sample Problem 9.6

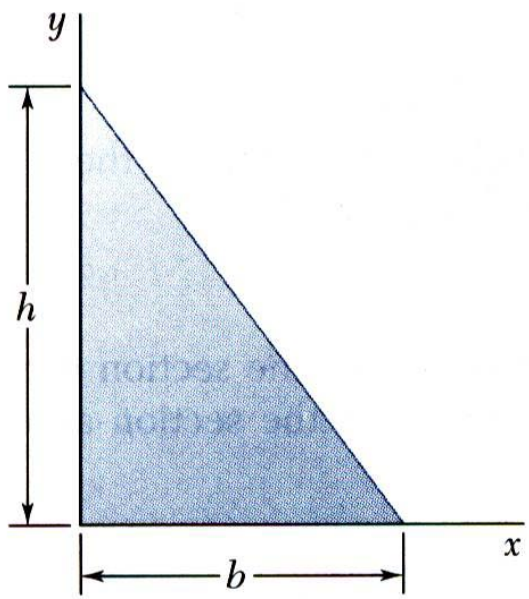

Determine the product of inertia of the right triangle *(a)* with respect to the *x* and *y* axes and *(b)* with respect to centroidal axes parallel to the *x* and *y* axes.

SOLUTION:

- Determine the product of inertia using direct integration with the parallel axis theorem on vertical differential area strips
- Apply the parallel axis theorem to evaluate the product of inertia with respect to the centroidal axes.

© 2007 The McGraw-Hill Companies, Inc. All rights reserved.

Sample Problem 9.6

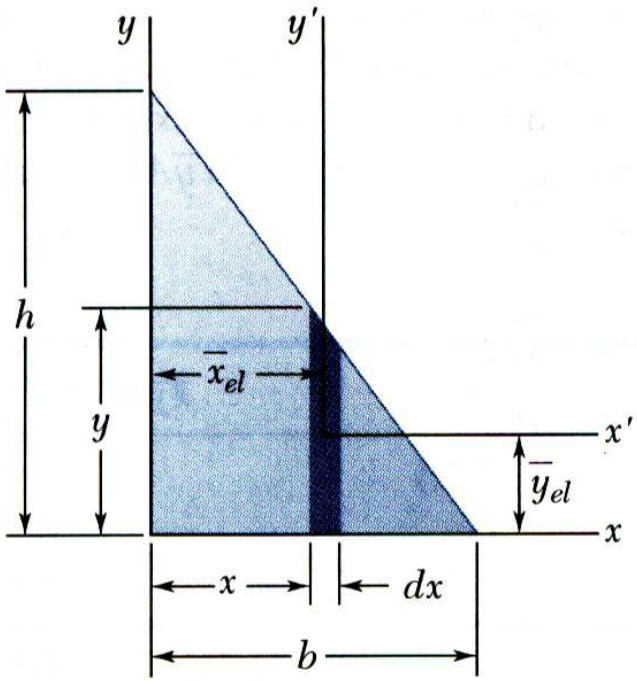

SOLUTION:

- Determine the product of inertia using direct integration with the parallel axis theorem on vertical differential area strips

$$y = h\left(1-\frac{x}{b}\right) \qquad dA = y\,dx = h\left(1-\frac{x}{b}\right)dx$$

$$\bar{x}_{el} = x \qquad \bar{y}_{el} = \tfrac{1}{2}y = \tfrac{1}{2}h\left(1-\frac{x}{b}\right)$$

Integrating dI_x from $x = 0$ to $x = b$,

$$I_{xy} = \int dI_{xy} = \int \bar{x}_{el}\bar{y}_{el}dA = \int_0^b x\left(\tfrac{1}{2}\right)h^2\left(1-\frac{x}{b}\right)^2 dx$$

$$= h^2\int_0^b\left(\frac{x}{2}-\frac{x^2}{b}+\frac{x^3}{2b^2}\right)dx = h^2\left[\frac{x^2}{4}-\frac{x^3}{3b}+\frac{x^4}{8b^2}\right]_0^b$$

$$\boxed{I_{xy} = \tfrac{1}{24}b^2h^2}$$

© 2007 The McGraw-Hill Companies, Inc. All rights reserved.

Sample Problem 9.6

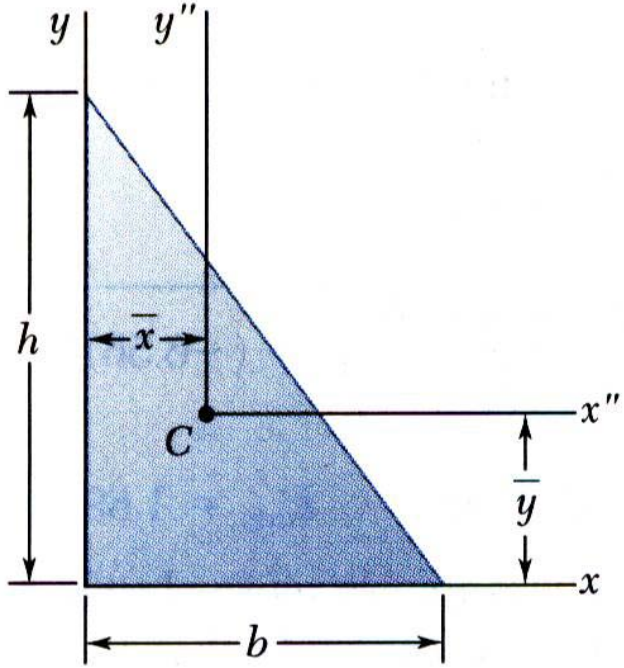

- Apply the parallel axis theorem to evaluate the product of inertia with respect to the centroidal axes.

$$\bar{x} = \tfrac{1}{3}b \qquad \bar{y} = \tfrac{1}{3}h$$

With the results from part *a*,

$$I_{xy} = \bar{I}_{x''y''} + \bar{x}\bar{y}A$$

$$\bar{I}_{x''y''} = \tfrac{1}{24}b^2h^2 - \left(\tfrac{1}{3}b\right)\left(\tfrac{1}{3}h\right)\left(\tfrac{1}{2}bh\right)$$

$$\boxed{\bar{I}_{x''y''} = -\tfrac{1}{72}b^2h^2}$$

© 2007 The McGraw-Hill Companies, Inc. All rights reserved.

Sample Problem 9.7

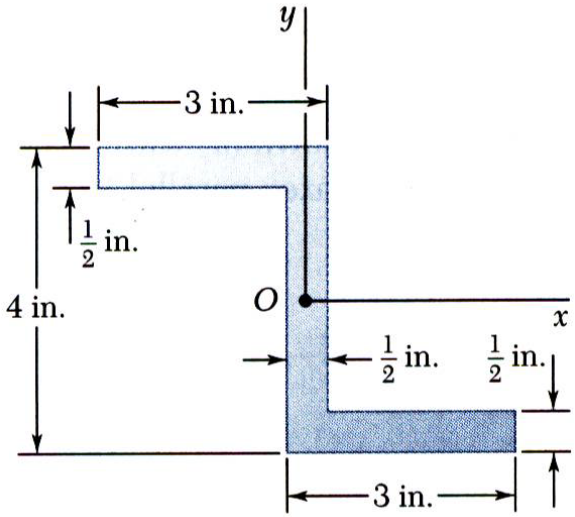

For the section shown, the moments of inertia with respect to the x and y axes are $I_x = 10.38$ in^4 and $I_y = 6.97$ in^4.

Determine *(a)* the orientation of the principal axes of the section about O, and *(b)* the values of the principal moments of inertia about O.

SOLUTION:

- Compute the product of inertia with respect to the xy axes by dividing the section into three rectangles and applying the parallel axis theorem to each.
- Determine the orientation of the principal axes (Eq. 9.25) and the principal moments of inertia (Eq. 9. 27).

© 2007 The McGraw-Hill Companies, Inc. All rights reserved.

Sample Problem 9.7

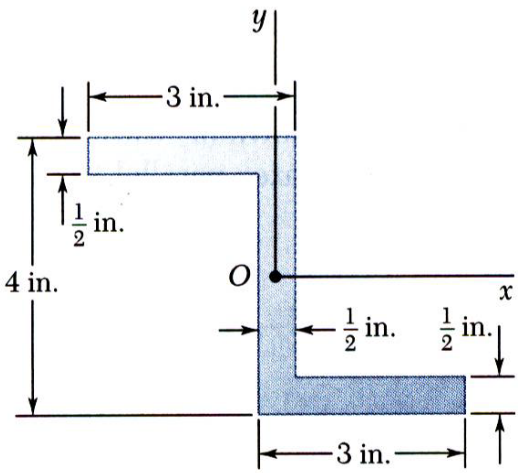

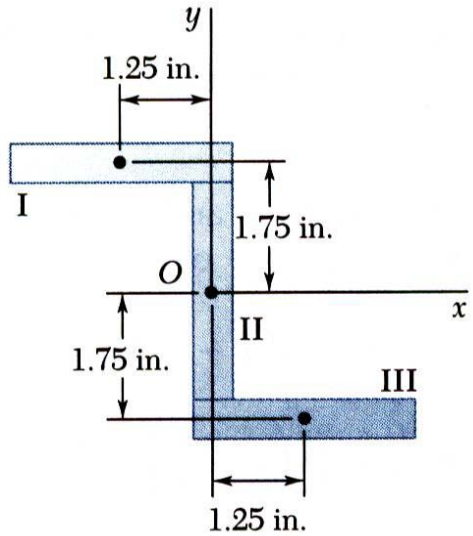

SOLUTION:

- Compute the product of inertia with respect to the *xy* axes by dividing the section into three rectangles.

  Apply the parallel axis theorem to each rectangle,

$$I_{xy} = \sum\left(\bar{I}_{x'y'} + \bar{x}\bar{y}A\right)$$

  Note that the product of inertia with respect to centroidal axes parallel to the *xy* axes is zero for each rectangle.

Rectangle	Area, in^2	$\bar{x}$, in.	$\bar{y}$, in.	$\bar{x}\bar{y}A$, in^4
I	1.5	−1.25	+1.75	−3.28
II	1.5	0	0	0
III	1.5	+1.25	−1.75	−3.28
				$\sum \bar{x}\bar{y}A = -6.56$

$$\boxed{I_{xy} = \sum \bar{x}\bar{y}A = -6.56\ \text{in}^4}$$

© 2007 The McGraw-Hill Companies, Inc. All rights reserved.

Sample Problem 9.7

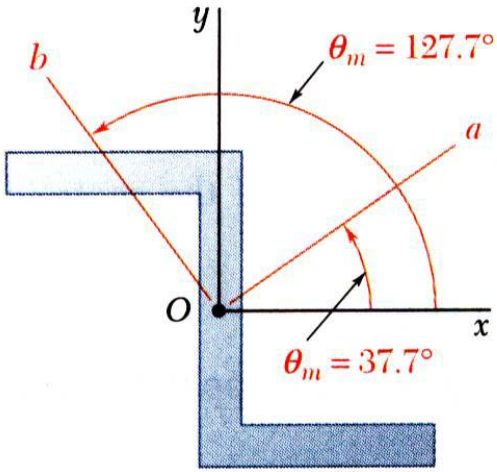

$$I_x = 10.38\ \text{in}^4$$

$$I_y = 6.97\ \text{in}^4$$

$$I_{xy} = -6.56\ \text{in}^4$$

- Determine the orientation of the principal axes (Eq. 9.25) and the principal moments of inertia (Eq. 9. 27).

$$\tan 2\theta_m = -\frac{2I_{xy}}{I_x - I_y} = -\frac{2(-6.56)}{10.38 - 6.97} = +3.85$$

$$2\theta_m = 75.4° \text{ and } 255.4°$$

$$\boxed{\theta_m = 37.7° \text{ and } \theta_m = 127.7°}$$

$$I_{\max,\min} = \frac{I_x + I_y}{2} \pm \sqrt{\left(\frac{I_x - I_y}{2}\right)^2 + I_{xy}^2}$$

$$= \frac{10.38 + 6.97}{2} \pm \sqrt{\left(\frac{10.38 - 6.97}{2}\right)^2 + (-6.56)^2}$$

$$\boxed{\begin{aligned} I_a &= I_{\max} = 15.45\ \text{in}^4 \\ I_b &= I_{\min} = 1.897\ \text{in}^4 \end{aligned}}$$

© 2007 The McGraw-Hill Companies, Inc. All rights reserved.

Mohr's Circle for Moments and Products of Inertia

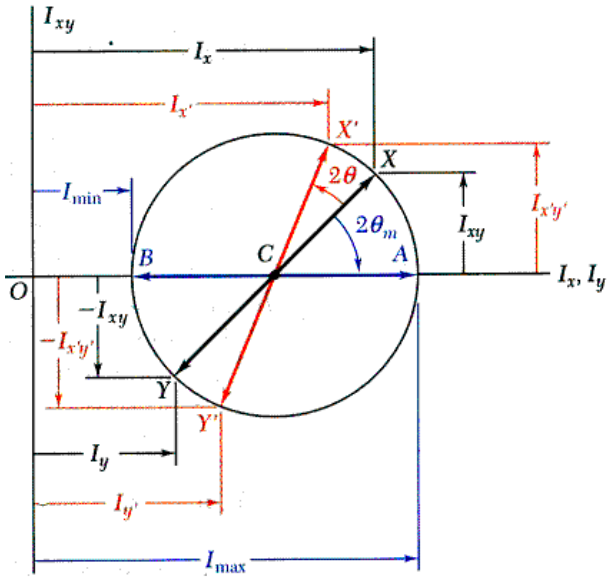

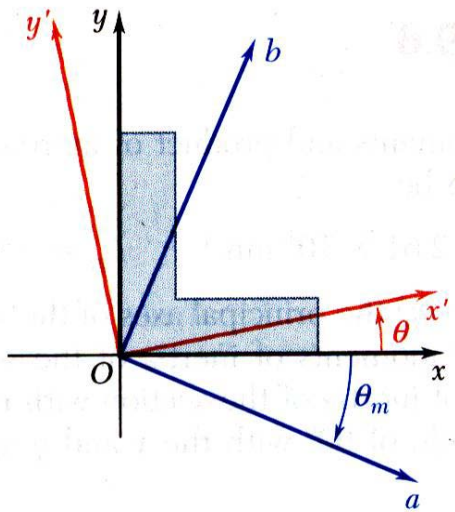

- The moments and product of inertia for an area are plotted as shown and used to construct *Mohr's circle*,

$$I_{ave} = \frac{I_x + I_y}{2} \qquad R = \sqrt{\left(\frac{I_x - I_y}{2}\right) + I_{xy}^2}$$

- Mohr's circle may be used to graphically or analytically determine the moments and product of inertia for any other rectangular axes including the principal axes and principal moments and products of inertia.

© 2007 The McGraw-Hill Companies, Inc. All rights reserved.

Sample Problem 9.8

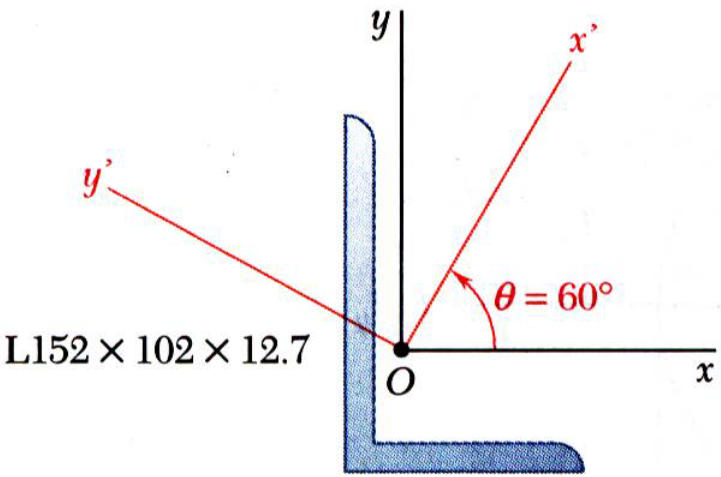

The moments and product of inertia with respect to the *x* and *y* axes are I_x = 7.24x106 mm^4, I_y = 2.61x106 mm^4, and I_{xy} = -2.54x10^6 mm^4.

Using Mohr's circle, determine *(a)* the principal axes about *O*, *(b)* the values of the principal moments about *O*, and *(c)* the values of the moments and product of inertia about the *x'* and *y'* axes

SOLUTION:

- Plot the points (I_x , I_{xy}) and (I_y ,-I_{xy}). Construct Mohr's circle based on the circle diameter between the points.
- Based on the circle, determine the orientation of the principal axes and the principal moments of inertia.
- Based on the circle, evaluate the moments and product of inertia with respect to the *x'y'* axes.

© 2007 The McGraw-Hill Companies, Inc. All rights reserved.

Sample Problem 9.8

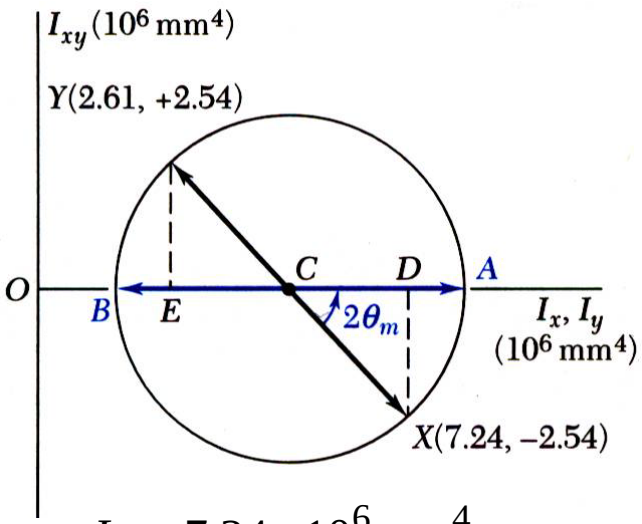

$$I_x = 7.24 \times 10^6 \text{ mm}^4$$

$$I_y = 2.61 \times 10^6 \text{ mm}^4$$

$$I_{xy} = -2.54 \times 10^6 \text{ mm}^4$$

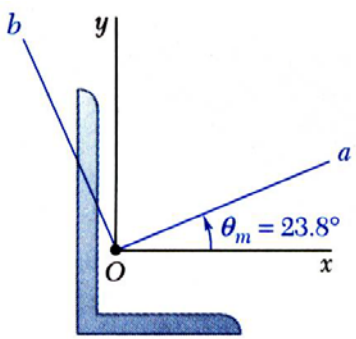

SOLUTION:

- Plot the points (I_x , I_{xy}) and (I_y ,-I_{xy}). Construct Mohr's circle based on the circle diameter between the points.

$$OC = I_{ave} = \tfrac{1}{2}\left(I_x + I_y\right) = 4.925 \times 10^6 \text{ mm}^4$$

$$CD = \tfrac{1}{2}\left(I_x - I_y\right) = 2.315 \times 10^6 \text{ mm}^4$$

$$R = \sqrt{(CD)^2 + (DX)^2} = 3.437 \times 10^6 \text{ mm}^4$$

- Based on the circle, determine the orientation of the principal axes and the principal moments of inertia.

$$\tan 2\theta_m = \frac{DX}{CD} = 1.097 \qquad 2\theta_m = 47.6° \qquad \boxed{\theta_m = 23.8°}$$

$$I_{\max} = OA = I_{ave} + R \qquad \boxed{I_{\max} = 8.36 \times 10^6 \text{ mm}^4}$$

$$I_{\min} = OB = I_{ave} - R \qquad \boxed{I_{\min} = 1.49 \times 10^6 \text{ mm}^4}$$

© 2007 The McGraw-Hill Companies, Inc. All rights reserved.

Sample Problem 9.8

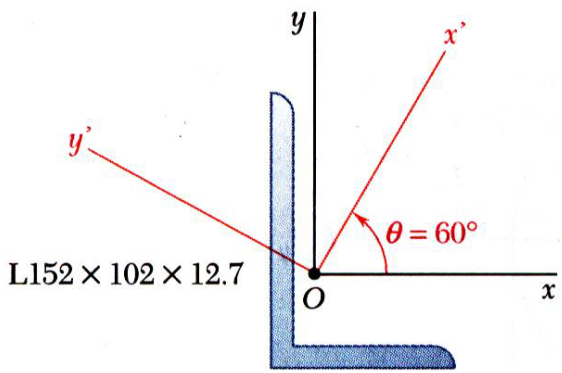

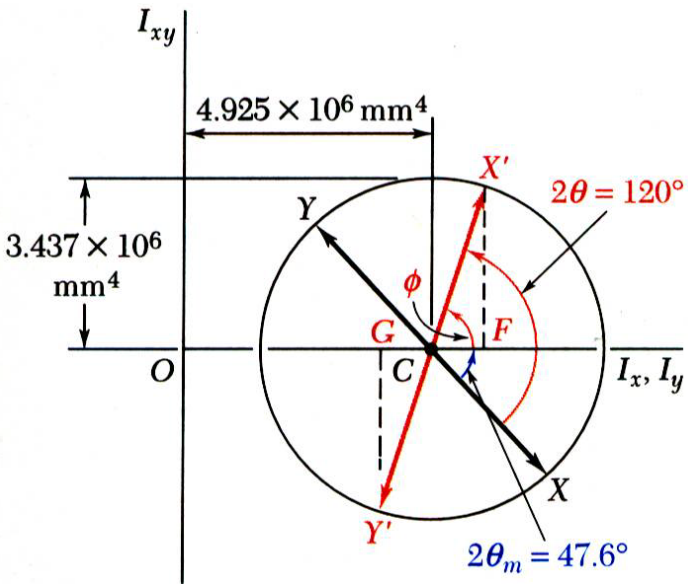

$$OC = I_{ave} = 4.925 \times 10^6 \text{mm}^4$$

$$R = 3.437 \times 10^6 \text{mm}^4$$

- Based on the circle, evaluate the moments and product of inertia with respect to the *x'y'* axes.

The points *X'* and *Y'* corresponding to the *x'* and *y'* axes are obtained by rotating *CX* and *CY* counterclockwise through an angle $\Theta = 2(60^o) = 120^o$. The angle that *CX'* forms with the *x'* axes is $\phi = 120^o - 47.6^o = 72.4^o$.

$$I_{x'} = OF = OC + CX' \cos\varphi = I_{ave} + R\cos 72.4^o$$

$$\boxed{I_{x'} = 5.96 \times 10^6 \text{mm}^4}$$

$$I_{y'} = OG = OC - CY' \cos\varphi = I_{ave} - R\cos 72.4^o$$

$$\boxed{I_{y'} = 3.89 \times 10^6 \text{mm}^4}$$

$$I_{x'y'} = FX' = CY' \sin\varphi = R\sin 72.4^o$$

$$\boxed{I_{x'y'} = 3.28 \times 10^6 \text{mm}^4}$$

© 2007 The McGraw-Hill Companies, Inc. All rights reserved.

Moment of Inertia of a Mass

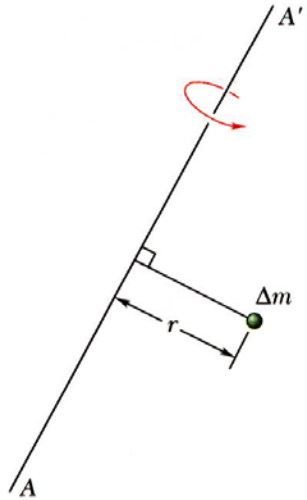

- Angular acceleration about the axis *AA'* of the small mass Δm due to the application of a couple is proportional to $r^2\Delta m$.

  $r^2\Delta m =$ *moment of inertia* of the mass Δm with respect to the axis *AA'*

- For a body of mass *m* the resistance to rotation about the axis *AA' is*

$$I = r_1^2\Delta m + r_2^2\Delta m + r_3^2\Delta m + \cdots$$

$$= \int r^2 dm = \textit{mass moment of inertia}$$

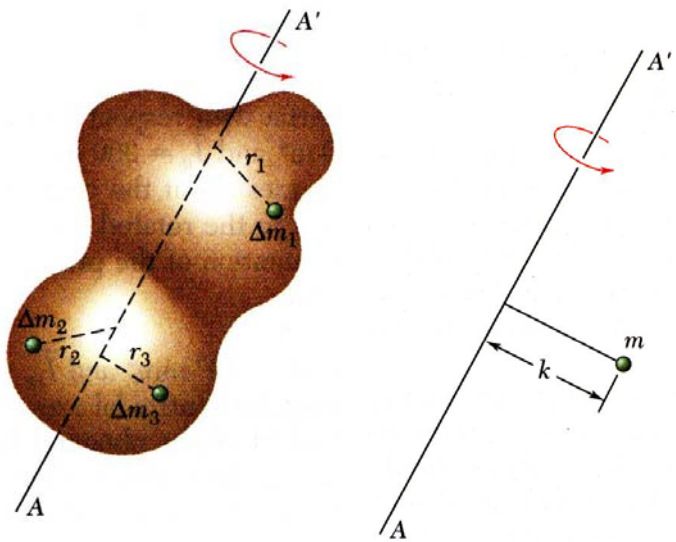

- The radius of gyration for a concentrated mass with equivalent mass moment of inertia is

$$I = k^2 m \qquad k = \sqrt{\frac{I}{m}}$$

© 2007 The McGraw-Hill Companies, Inc. All rights reserved.

Moment of Inertia of a Mass

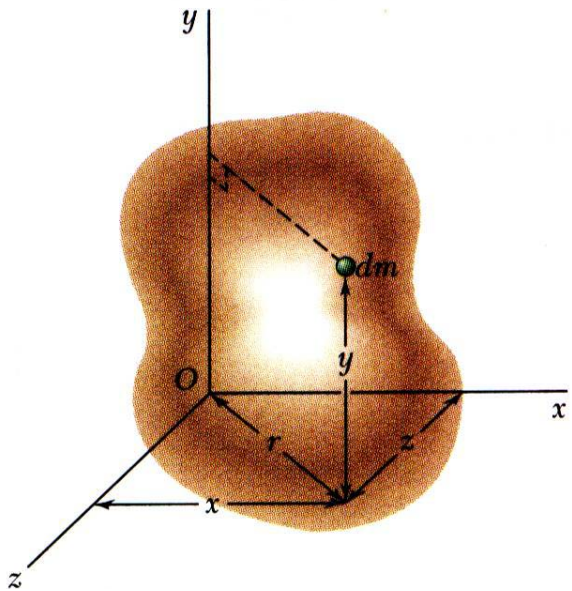

- Moment of inertia with respect to the *y* coordinate axis is

$$I_y = \int r^2 dm = \int \left(z^2 + x^2\right) dm$$

- Similarly, for the moment of inertia with respect to the *x* and *z* axes,

$$I_x = \int \left(y^2 + z^2\right) dm$$

$$I_z = \int \left(x^2 + y^2\right) dm$$

- In SI units,

$$I = \int r^2 dm = \left(\mathrm{kg} \cdot \mathrm{m}^2\right)$$

In U.S. customary units,

$$I = \left(slug \cdot ft^2\right) = \left(\frac{lb \cdot s^2}{ft} ft^2\right) = \left(lb \cdot ft \cdot s^2\right)$$

© 2007 The McGraw-Hill Companies, Inc. All rights reserved.

Parallel Axis Theorem

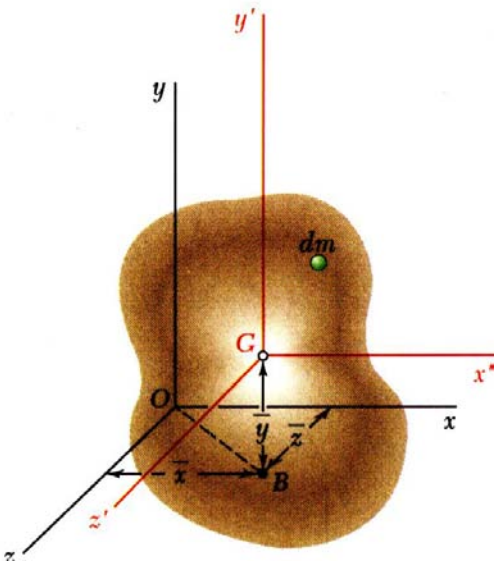

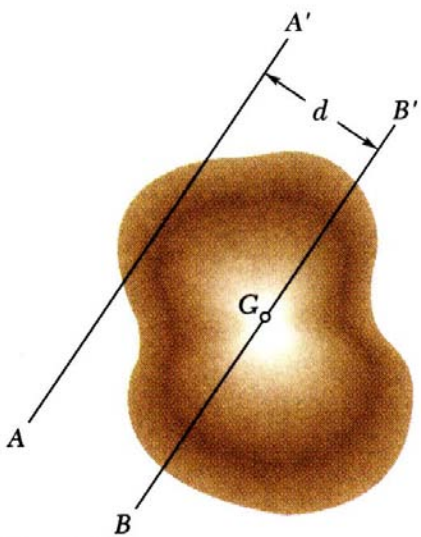

- For the rectangular axes with origin at *O* and parallel centroidal axes,

$$I_x = \int \left(y^2 + z^2\right) dm = \int \left[(y' + \bar{y})^2 + (z' + \bar{z})^2\right] dm$$

$$= \int \left(y'^2 + z'^2\right) dm + 2\bar{y}\int y' dm + 2\bar{z}\int z' dm + \left(\bar{y}^2 + \bar{z}^2\right)\int dm$$

$$I_x = \bar{I}_{x'} + m\left(\bar{y}^2 + \bar{z}^2\right)$$

$$I_y = \bar{I}_{y'} + m\left(\bar{z}^2 + \bar{x}^2\right)$$

$$I_z = \bar{I}_{z'} + m\left(\bar{x}^2 + \bar{y}^2\right)$$

- Generalizing for any axis *AA'* and a parallel centroidal axis,

$$I = \bar{I} + md^2$$

© 2007 The McGraw-Hill Companies, Inc. All rights reserved.

Moments of Inertia of Thin Plates

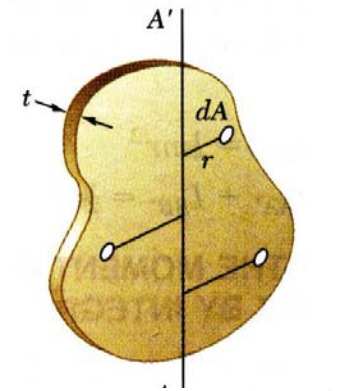

- For a thin plate of uniform thickness t and homogeneous material of density ρ, the mass moment of inertia with respect to axis AA' contained in the plate is

$$I_{AA'} = \int r^2 dm = \rho t \int r^2 dA$$
$$= \rho t \, I_{AA',area}$$

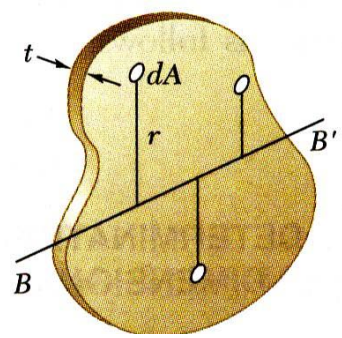

- Similarly, for perpendicular axis BB' which is also contained in the plate,

$$I_{BB'} = \rho t \, I_{BB',area}$$

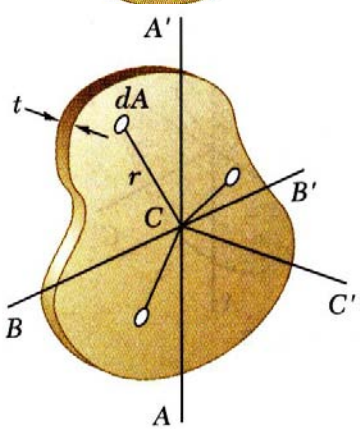

- For the axis CC' which is perpendicular to the plate,

$$I_{CC'} = \rho t \, J_{C,area} = \rho t \left(I_{AA',area} + I_{BB',area} \right)$$
$$= I_{AA'} + I_{BB'}$$

© 2007 The McGraw-Hill Companies, Inc. All rights reserved.

Moments of Inertia of Thin Plates

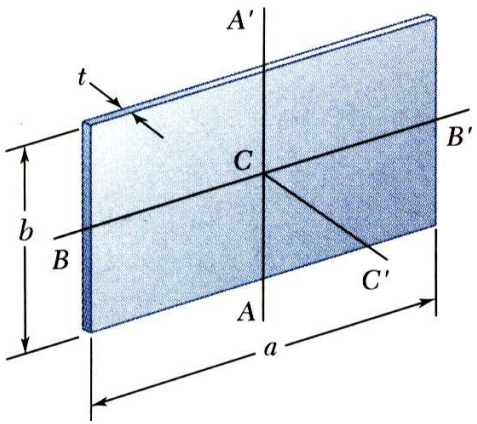

- For the principal centroidal axes on a rectangular plate,

$$I_{AA'} = \rho t\, I_{AA',area} = \rho t\left(\tfrac{1}{12}a^3 b\right) = \tfrac{1}{12}ma^2$$

$$I_{BB'} = \rho t\, I_{BB',area} = \rho t\left(\tfrac{1}{12}ab^3\right) = \tfrac{1}{12}mb^2$$

$$I_{CC'} = I_{AA',mass} + I_{BB',mass} = \tfrac{1}{12}m\left(a^2 + b^2\right)$$

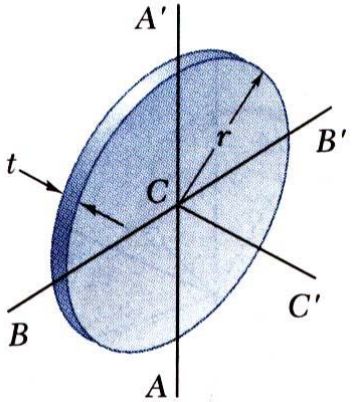

- For centroidal axes on a circular plate,

$$I_{AA'} = I_{BB'} = \rho t\, I_{AA',area} = \rho t\left(\tfrac{1}{4}\pi r^4\right) = \tfrac{1}{4}mr^2$$

$$I_{CC'} = I_{AA'} + I_{BB'} = \tfrac{1}{2}mr^2$$

© 2007 The McGraw-Hill Companies, Inc. All rights reserved.